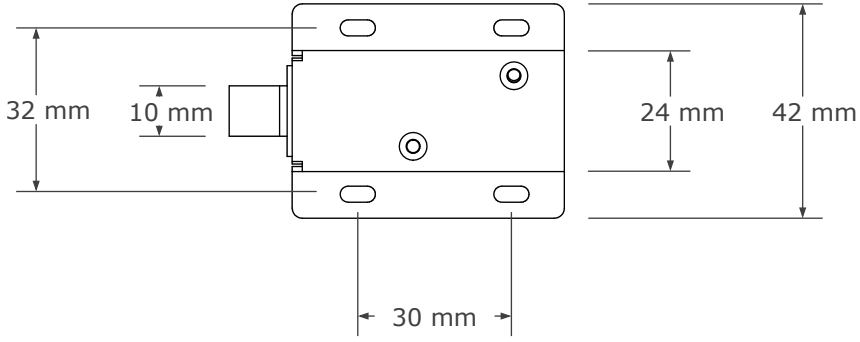
32 mm
10 mm
24 mm
42 mm
30 mm

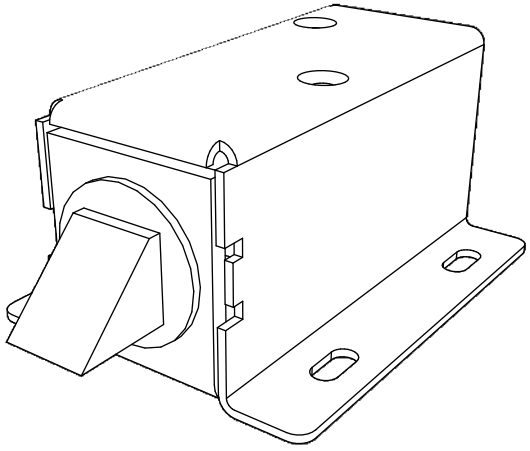

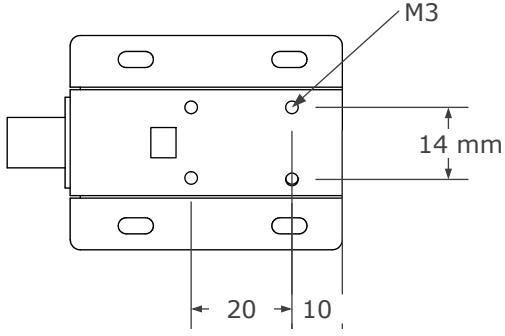
M3
14 mm
20
10

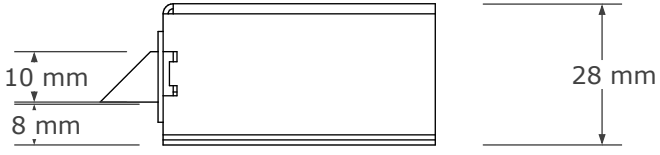
10 mm
8 mm
28 mm

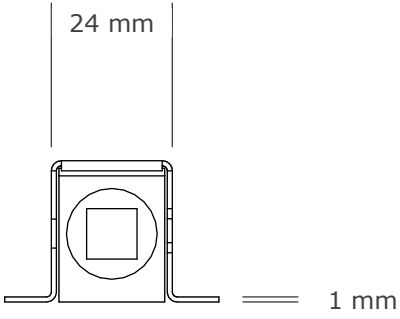
24 mm
1 mm